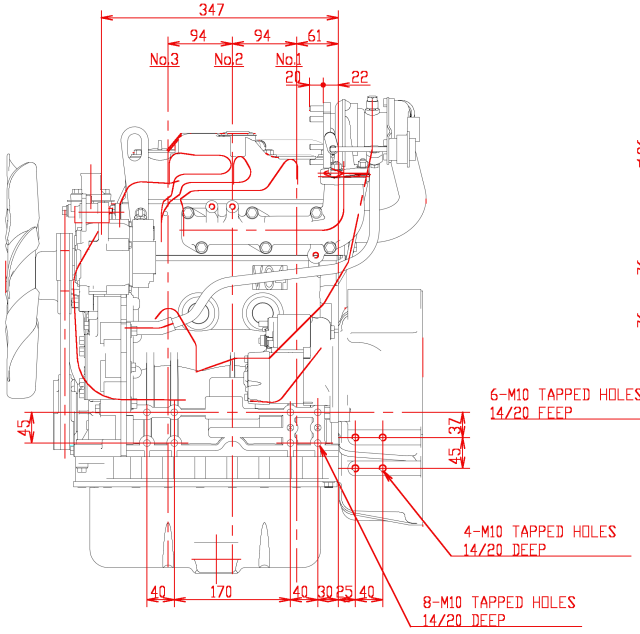

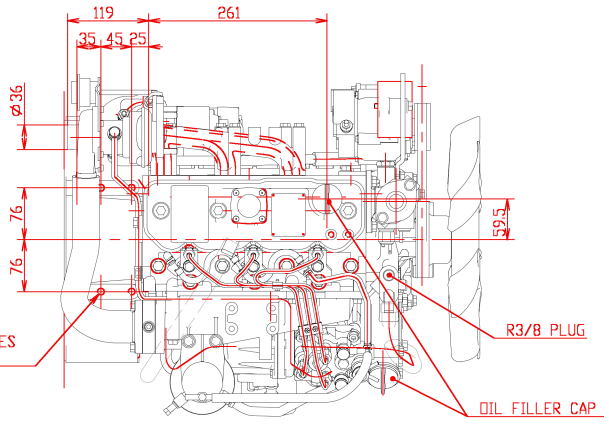

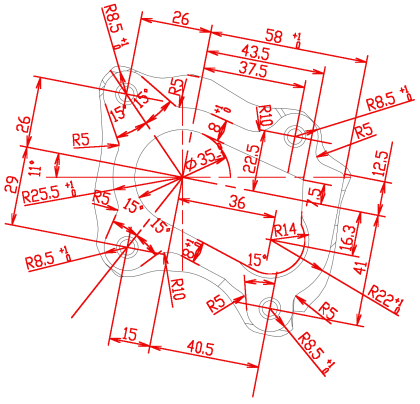

DETAIL OF TURBINE OUTLET
SCALE 1:1

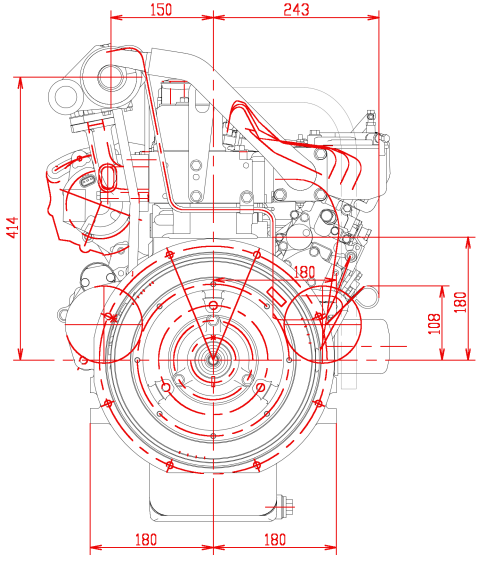

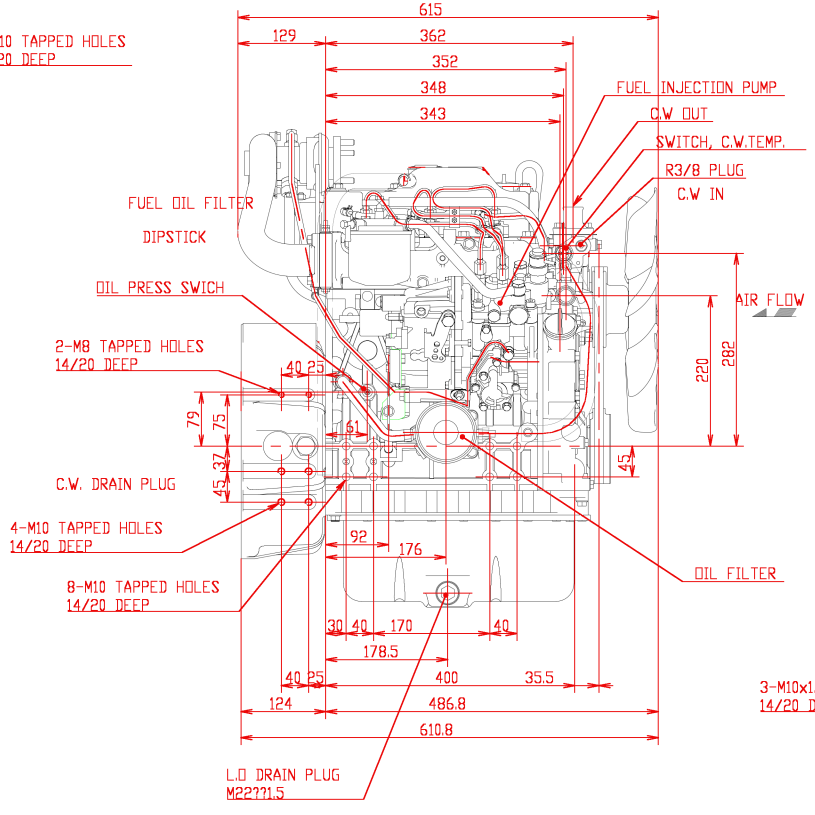

DETAIL OF TURBINE OUTLET

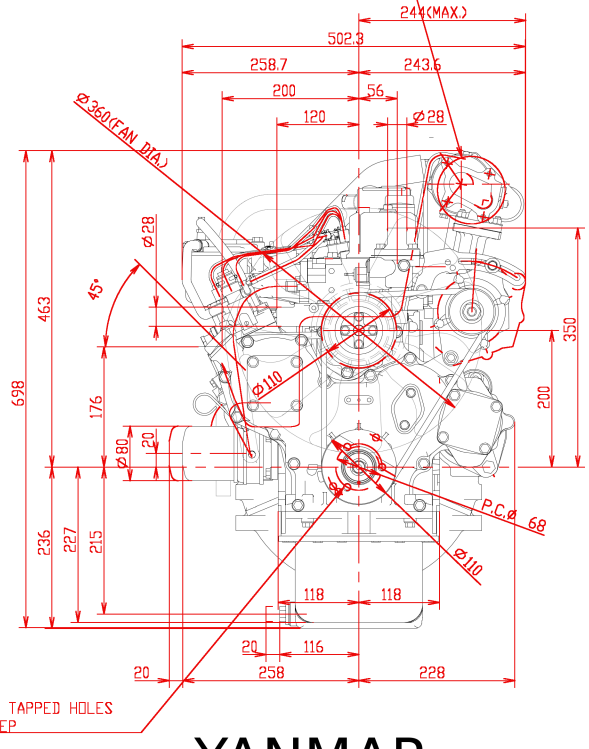

YANMAR
3TNV84T

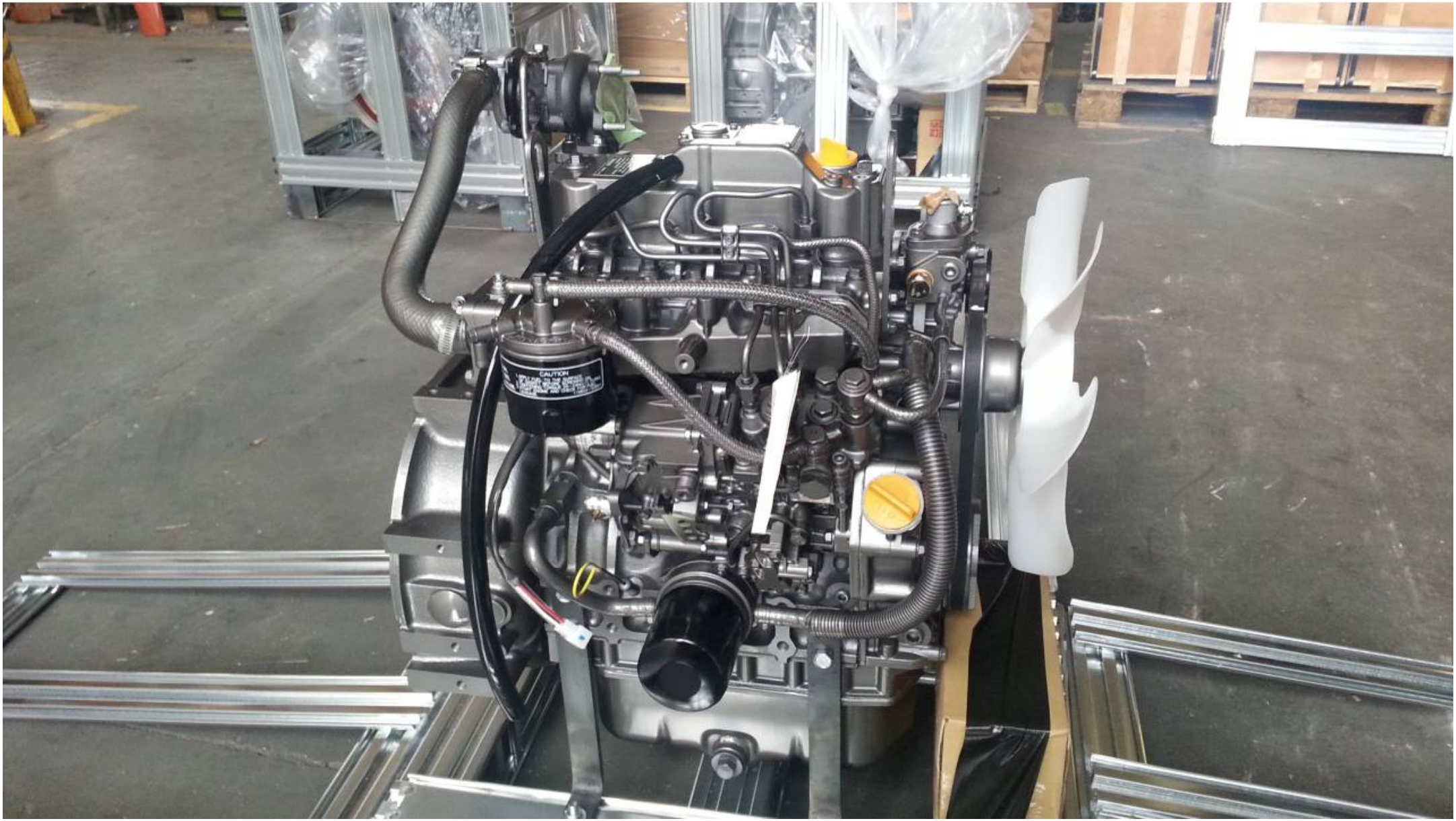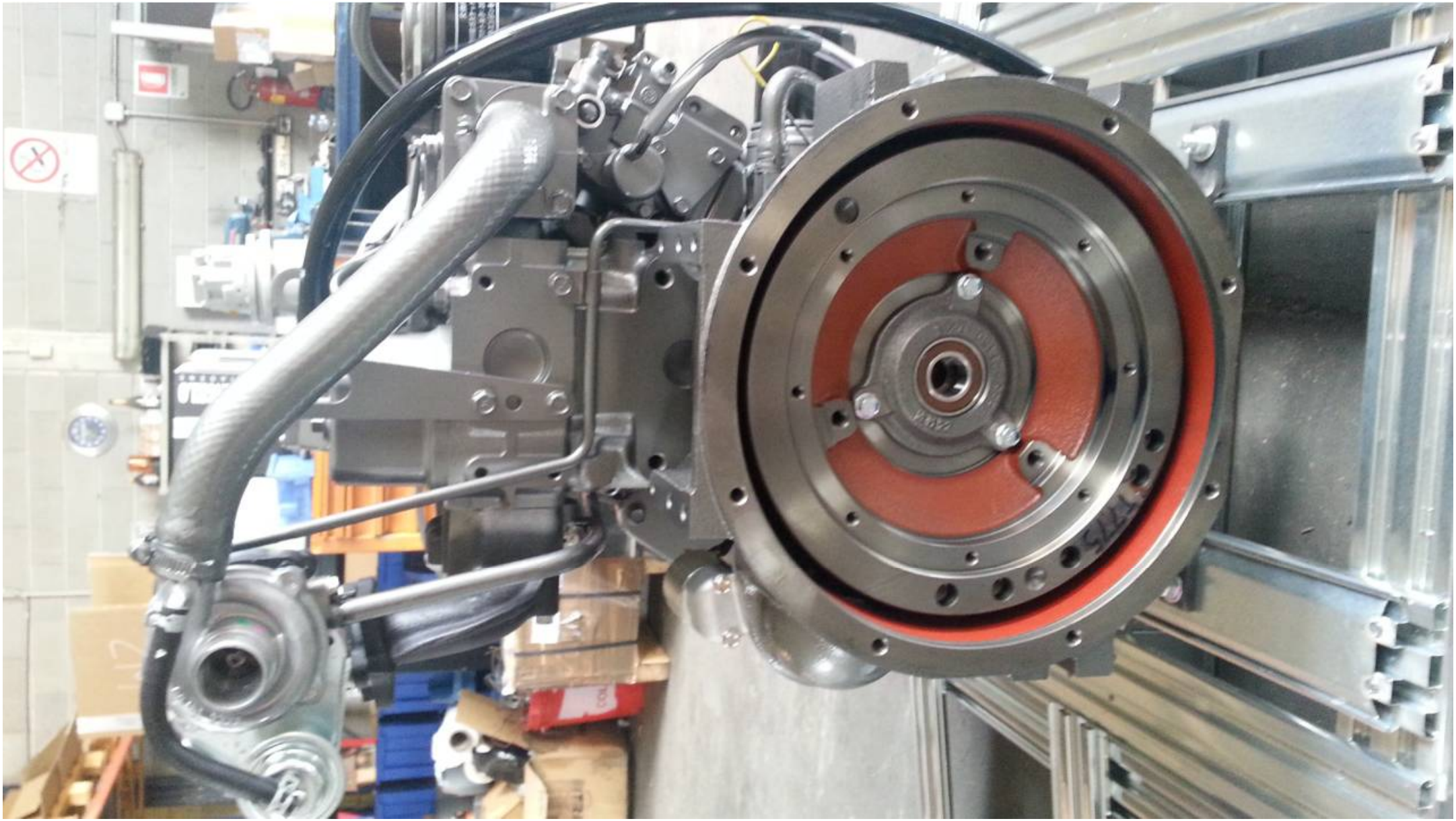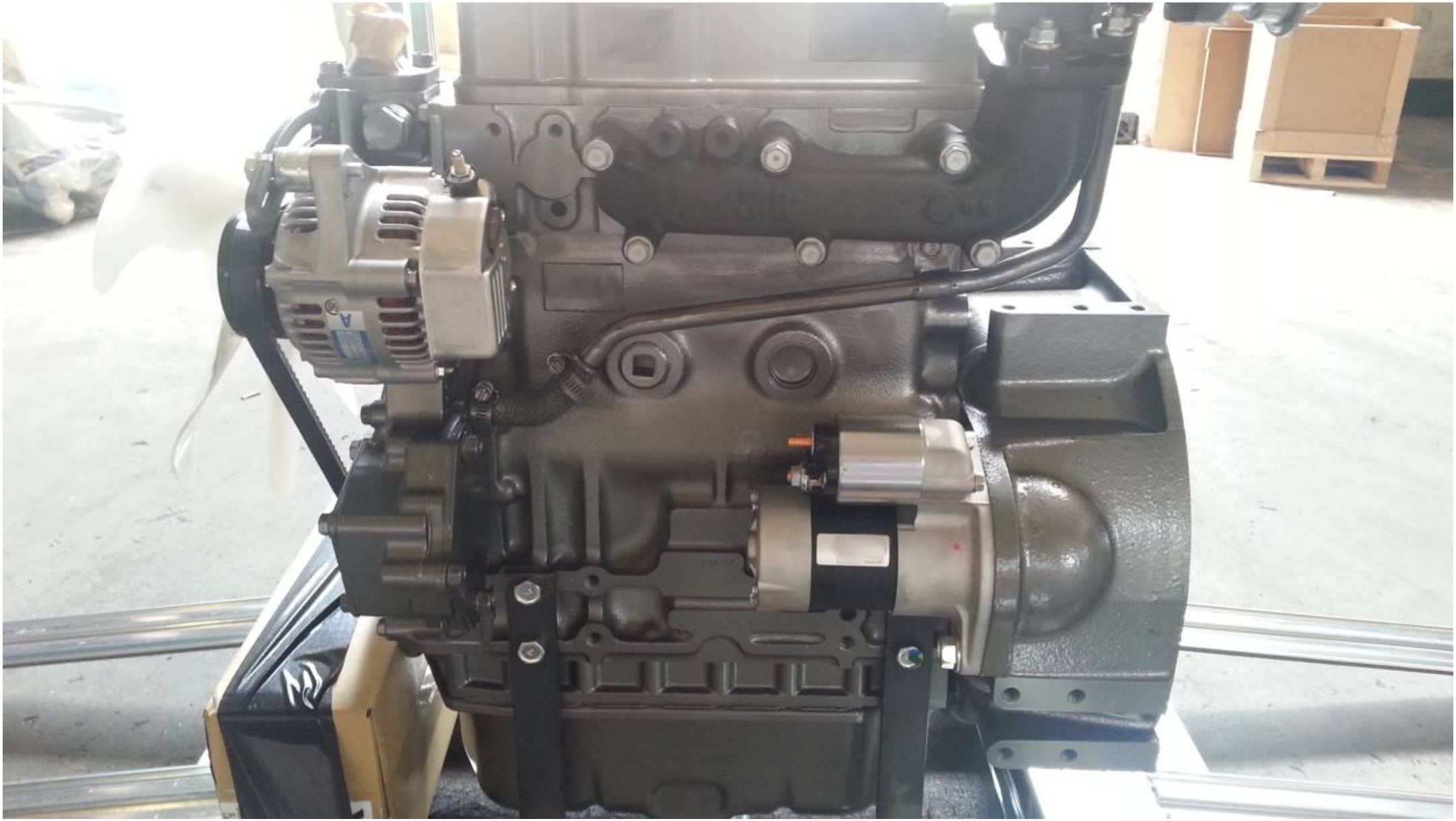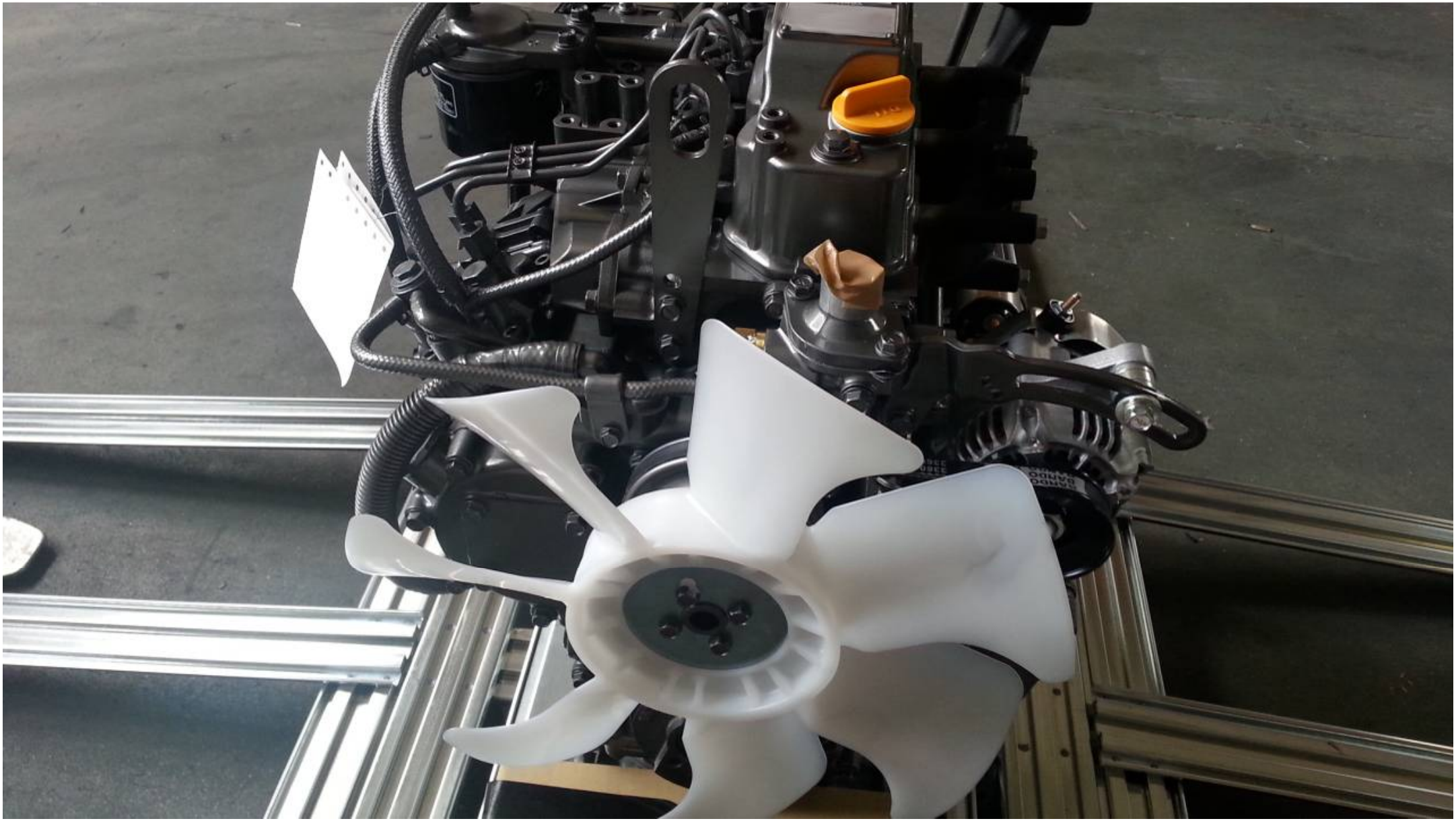
CAUTION